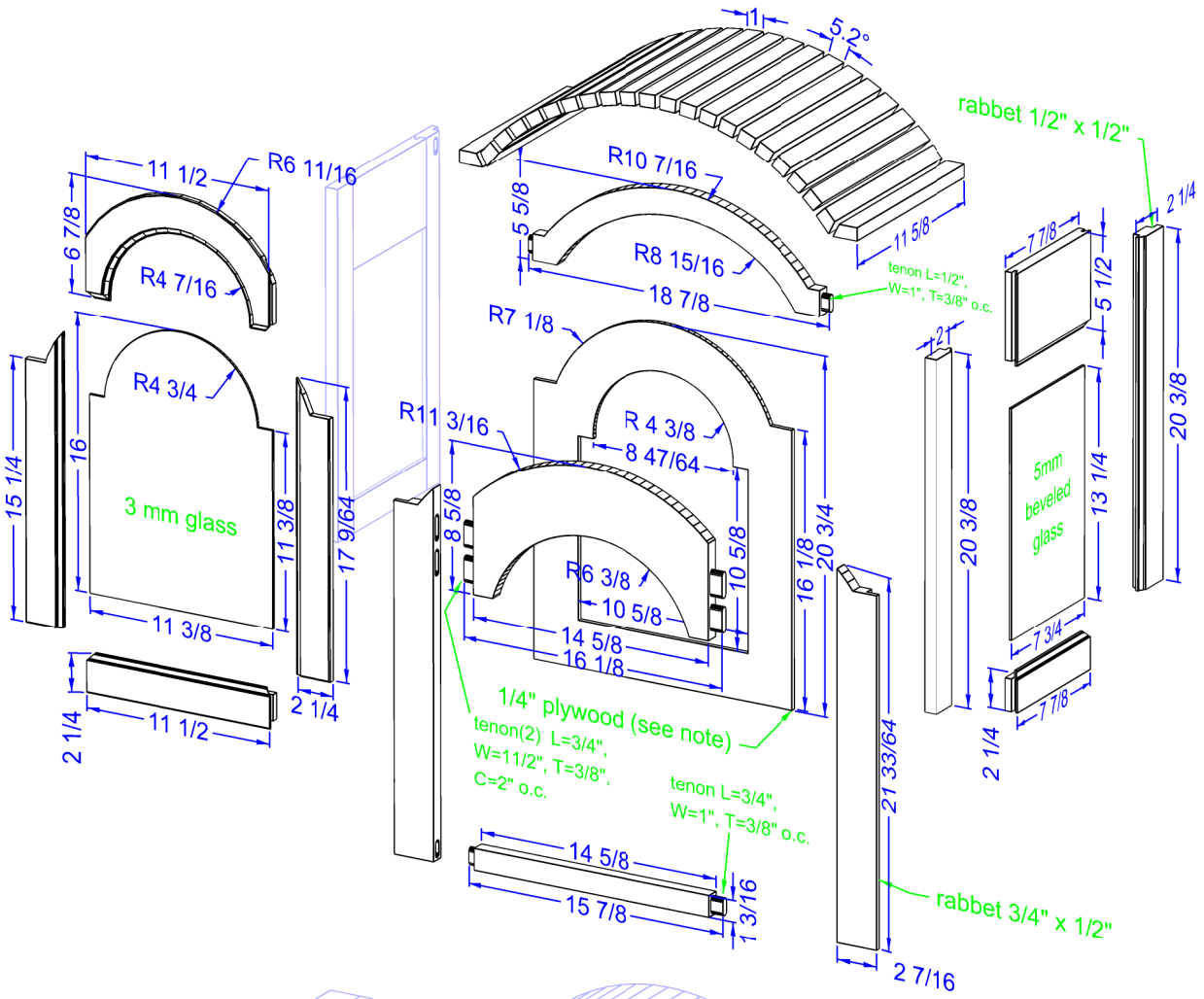

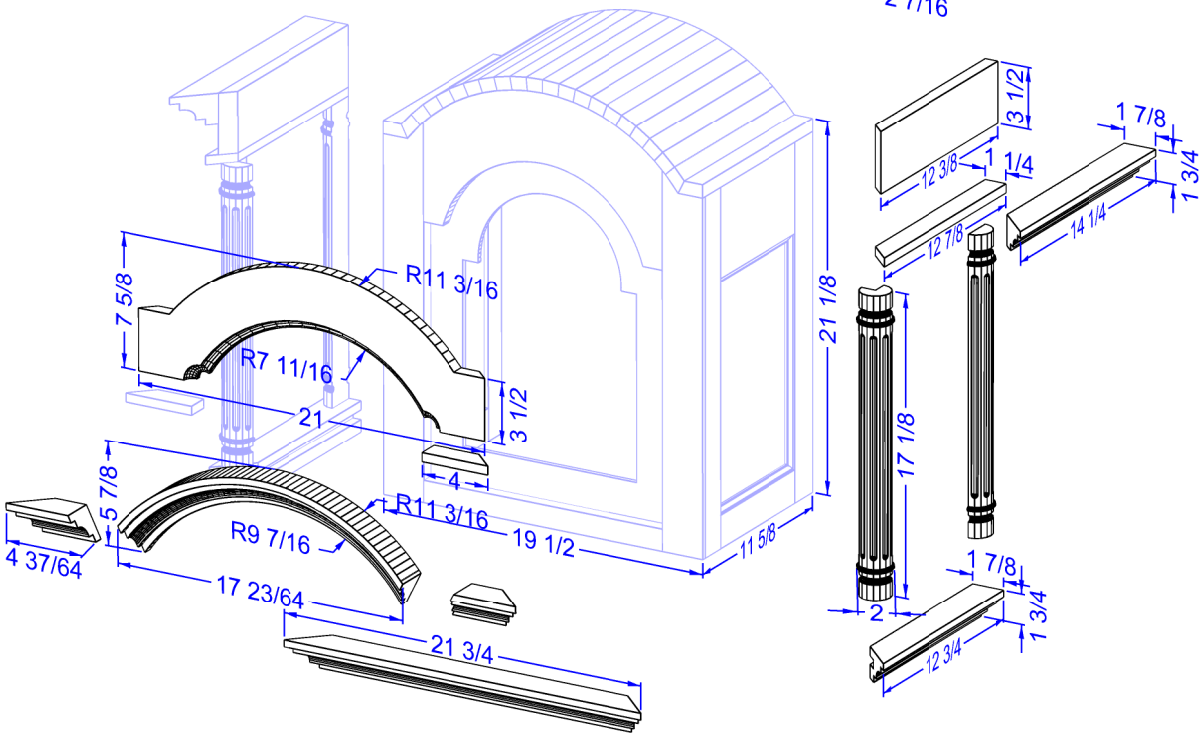

All material 3/4" thick unless stated otherwise
For moulding profiles see drawing 07
For column details see drawing 10
o.c. = on centre

NOTE: dial trim panel:
If made from solid wood
then construct it the
same as the hood front.

Grandfather Clock hood construction	ref. : GC-PV-21 rev. : 23-May-2013 scale: varies
Dempsey Woodworking -- just a hobby --	unit : inch view : perspective
DesignCAD 3D MAX v22.1 / Copyright (c) 2013 Pieter A.C.A. van Vliet	size : letter